FEATURES

- Single and Dual Outputs
- High Efficiency up to 84%
- Standard 1.25 x 0.8 x 0.4 Inches
- Fixed Switching Frequency (300KHz)
- 2:1 and 4:1 Ultra Wide Input Voltage Ranges
- Compliant to RoHS EU Directive 2002/95/EC
- UL60950-1, EN60950-1, and IEC60950-1 Licensed
- Standard 24 Pin DIP Package and SMT Type Package
- CE Mark meets 2006/95/EC, 93/68/EEC, and 2004/108/EC

APPLICATIONS

- Wireless Network
- Telecom/Datacom
- Industry Control Systems
- Measurement Equipment
- Semiconductor Equipment

DESCRIPTION

The LANCW5 series of DC/DC converters offers up to 6 watts of output power in an IC compatible 24 pin DIP configuration. The LANCW5 series has a 2:1 (W) wide input voltage of 9-18, 18-36, and 36-75VDC. The LANCW5 series also has a 4:1 (UW) ultra wide input range of 9-36 and 18-75VDC. This series is intended to provide power and isolation for applications requiring high power density. Some features include 1600VDC isolation, short circuit protection, and five-sided shielding. Also available are SMT type (suffix "S") and I type (operating temperature: -40°C~+85°C without derating- add suffix "I").

SPECIFICATIONS: *LANCW5 Series*

All specifications apply @ 25°C ambient unless otherwise noted

INPUT SPECIFICATIONS

Input Voltage Range
- LANCW5 ..... 12V nominal input 9-18VDC
  - 24V nominal input 18-36VDC
  - 48V nominal input 36-75VDC
- LANCUW5 ..... 24V nominal input 9-36VDC
  - 48V nominal input 18-75VDC

Input Filter ..... Pi Type

Input Surge Voltage (100ms max) ..... 12V input 36VDC
24V input 50VDC
48V input 100VDC

Input Reflected Ripple Current (nominal Vin and full load) 20mAp-p

Start Up Time (nominal Vin and constant resistive load) ..... 450ms typ.

OUTPUT SPECIFICATIONS

Output Voltage ..... see table

Voltage Accuracy (nominal Vin and full load) ..... ±1%

Output Current ..... see table

Output Power ..... 5 watts max.

Line Regulation (LL to HL at FL) ..... ±0.2%

Load Regulation (no load to full load) ..... Single Output ..... ±0.5%
Dual Output ..... ±1%

Cross Regulation (Dual) (Asymmetrical load 25% / 100% FL) ..... ±5%

Minimum Load 0%

Ripple/Noise (20 MHz BW) 50mVp-p

Temperature Coefficient ..... ±0.02% / °C max.

Transient Response Recovery Time (25% load step) 200µs

GENERAL SPECIFICATIONS

Efficiency ..... see table

Switching Frequency ..... 300KHz typ.

Isolation Voltage
- Input to Output ..... 1600VDC min.
- Input (Output) to Case (DIP) ..... 1600VDC min.
- Input (Output) to Case (SMT) ..... 1000VDC min.

Isolation Resistance ..... 10^9 ohms min.

Isolation Capacitance ..... 300pF max.

PROTECTION SPECIFICATIONS

Over Load Protection (% of full load at nominal input) ..... 170% typ.

Short Circuit Protection ..... Continuous, automatic recovery

ENVIRONMENTAL SPECIFICATIONS

Operating Temperature
- Standard ..... -25°C to +85°C (w/ derating)
- "I" (See Notes 6 & 9) ..... -40°C to +85°C (w/o derating)
- "I" (UW Series) ..... -40°C to +85°C (w/ derating)

Storage Temperature ..... -55°C ~ +105°C

Maximum Case Temperature ..... Standard ..... +100°C
"I" suffix ..... +105°C

Relative Humidity (non-condensing) ..... 5% to 95% RH

Thermal Impedance (Natural Convection) ..... 20°C / Watt

Thermal Shock MIL-STD-810F

Vibration ..... 10~55Hz, 10G, 30 minutes along X, Y, and Z

MTBF (See Note 1) ..... BELLCORE TR-NWT-000332 ..... 3.165 x 10^6 hrs
MIL-HDBK-217F ..... 1.631 x 10^6 hrs

PHYSICAL SPECIFICATIONS

Weight ..... DIP type 0.55oz (16g)
SMT type 0.63oz (18g)

Dimensions ..... 1.25 x 0.80 x 0.40 inches (31.8 x 20.3 x 10.2 mm)

Case Material ..... Nickel-coated copper

Base Material ..... Non-conductive black plastic

Potting material ..... Epoxy (UL94-V0)

Shielding ..... five – sided

SAFETY & EMC

Approvals and Standards ..... IEC60950-1, UL60950-1[12], EN60950-1

EMI (See Note 8) ..... EN55022 ..... Class A

ESD ..... EN61000-4-2 ..... Air ± 8KV
Contact ± 6KV ..... Perf. Criteria A

Radiated Immunity ..... EN61000-4-3 ..... 10V/m Perf. Criteria A

Fast Transient ..... EN61000-4-4 ..... ±2KV Perf. Criteria B

Surge (See Note 7) ..... EN61000-4-5 ..... ±1KV Perf. Criteria B

Conducted Immunity ..... EN61000-4-6 ..... 10 Vrms Perf. Criteria A

Due to advances in technology, specifications subject to change without notice

MODEL SELECTION TABLE

Model Number	Input Range	Output Voltage	Output Current	Ripple & Noise (4)	Input Current		Efficiency (4)	Output Power	Capacitor(5) Load Max	UL Approval (12)
					No Load(3)	Full Load(2)				
LANC1233W5	9–18 VDC	3.3 VDC	1000mA	50mVp-p	10mA	382mA	76%	3.3W	2200µF	UL60950-1
LANC1205W5	9–18 VDC	5 VDC	1000mA	50mVp-p	10mA	563mA	78%	5W	1000µF	UL60950-1
LANC1212W5	9–18 VDC	12 VDC	470mA	50mVp-p	10mA	603mA	82%	5.64W	220µF	UL60950-1
LANC1215W5	9–18 VDC	15 VDC	400mA	50mVp-p	10mA	649mA	81%	6W	150µF	UL60950-1
LANC1205DW5	9–18 VDC	±5 VDC	±500mA	50mVp-p	15mA	563mA	78%	5W	± 68µF	UL60950-1
LANC1212DW5	9–18 VDC	±12 VDC	±230mA	50mVp-p	20mA	597mA	81%	5.5W	± 100µF	UL60950-1
LANC1215DW5	9–18 VDC	±15 VDC	±190mA	50mVp-p	15mA	594mA	84%	5.7W	± 68µF	UL60950-1
LANC2433W5 (UW)	18–36 (9–36) VDC	3.3 VDC	1000mA	50mVp-p	10mA (5mA)	194mA (191mA)	75% (76%)	3.3W	2200µF	UL60950-1
LANC2405W5 (UW)	18–36 (9–36) VDC	5 VDC	1000mA	50mVp-p	15mA (10mA)	285mA (278mA)	77% (79%)	5W	1000µF	UL60950-1
LANC2406UW5	9–36 VDC	6 VDC	833mA	50mVp-p	-	278mA	79%	5W	690µF	-
LANC2412W5 (UW)	18–36 (9–36) VDC	12 VDC	470mA	50mVp-p	15mA (5mA)	305mA (305mA)	81% (81%)	5.64W	220µF	UL60950-1
LANC2415W5 (UW)	18–36 (9–36) VDC	15 VDC	400mA	50mVp-p	15mA (10mA)	325mA (312mA)	81% (84%)	6W	150µF	UL60950-1
LANC2405DW5 (UW)	18–36 (9–36) VDC	±5 VDC	±500mA	50mVp-p	15mA (10mA)	274mA (282mA)	80% (78%)	5W	± 680µF	UL60950-1
LANC2412DW5 (UW)	18–36 (9–36) VDC	±12 VDC	±230mA	50mVp-p	20mA (10mA)	288mA (295mA)	84% (82%)	5.5W	± 100µF	UL60950-1
LANC2415DW5 (UW)	18–36 (9–36) VDC	±15 VDC	±190mA	50mVp-p	20mA (10mA)	308mA (297mA)	81% (84%)	5.7W	± 68µF	UL60950-1
LANC4833W5 (UW)	36–75 (18–75) VDC	3.3 VDC	1000mA	50mVp-p	10mA (5mA)	98mA (100mA)	74% (73%)	3.3W	2200µF	UL60950-1
LANC4805W5 (UW)	36–75 (18–75) VDC	5 VDC	1000mA	50mVp-p	10mA (10mA)	143mA (138mA)	77% (79%)	5W	1000µF	UL60950-1
LANC4812W5 (UW)	36–75 (18–75) VDC	12 VDC	470mA	50mVp-p	10mA (10mA)	151mA (155mA)	82% (80%)	5.64W	220µF	UL60950-1
LANC4815W5 (UW)	36–75 (18–75) VDC	15 VDC	400mA	50mVp-p	10mA (10mA)	162mA (160mA)	81% (82%)	6W	150µF	UL60950-1
LANC4805DW5 (UW)	36–75 (18–75) VDC	±5 VDC	±500mA	50mVp-p	10mA (10mA)	141mA (145mA)	78% (76%)	5W	± 68µF	UL60950-1
LANC4812DW5 (UW)	36–75 (18–75) VDC	±12 VDC	±230mA	50mVp-p	5mA (10mA)	147mA (151mA)	82% (80%)	5.5W	± 100µF	UL60950-1
LANC4815DW5 (UW)	36–75 (18–75) VDC	±15 VDC	±190mA	50mVp-p	10mA (10mA)	150mA (156mA)	83% (80%)	5.7W	± 68µF	UL60950-1

NOTES

1. BELLCORE TR-NWT-000332. Case 1: 50% Stress, Temperature at 40ºC.
   MIL-HDBK-217F Notice2 @ Ta=25°C, Full load (Ground, benign, controlled environment).
2. Maximum value at nominal input voltage and full load of standard type.
3. Typical value at nominal input voltage and no load.
4. Typical value at nominal input voltage and full load.
5. Test by minimum Vin and constant resistive load.
6. The industrial “I” suffix for 2:1 version is more efficient, therefore, it can be operated in a more extensive temperature range than standard and I suffix 4:1 input versions.
7. An external filter capacitor is required if the module has to meet EN61000-4-5. The filter capacitor suggested is Nippon chemi-com KY series, 220µF/100V, ESR 48mΩ.
8. The LANCW5 Series can meet EMC EN55022 Class A and Class B with an external filter in parallel with the input pins. See page 3 for filter suggestions.
9. There is no pin at PIN10 & PIN15 for LANC5UW series.
10. For industrial temperature range add the suffix “I” to the model number.
11. For SMT type add the suffix “S” to the model number.
12. UL approval can be added to any products not currently listed if required.

**Due to advances in technology, specifications subject to change without notice.*

DERATING CURVE

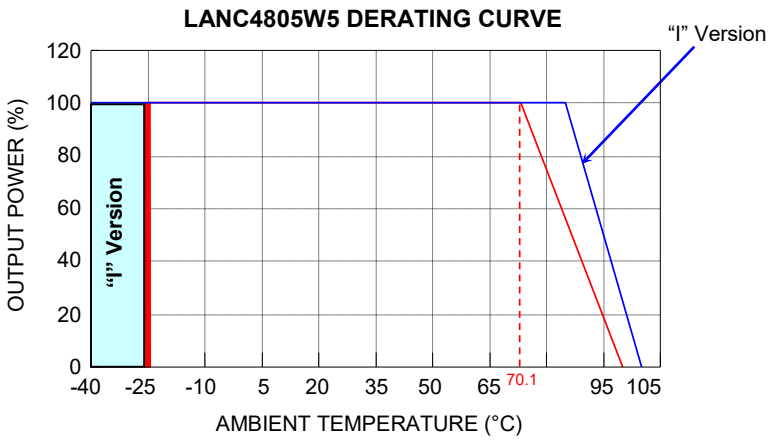

EFFICIENCY GRAPHS

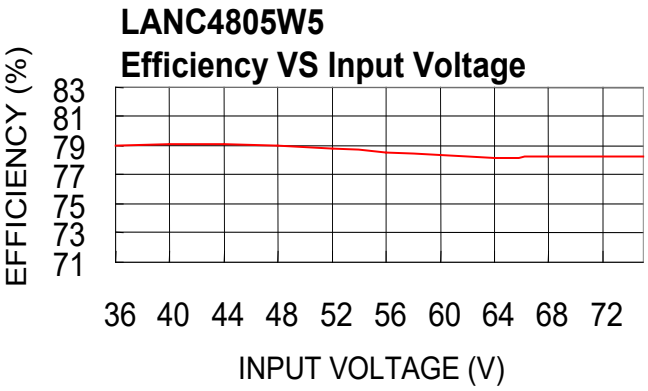

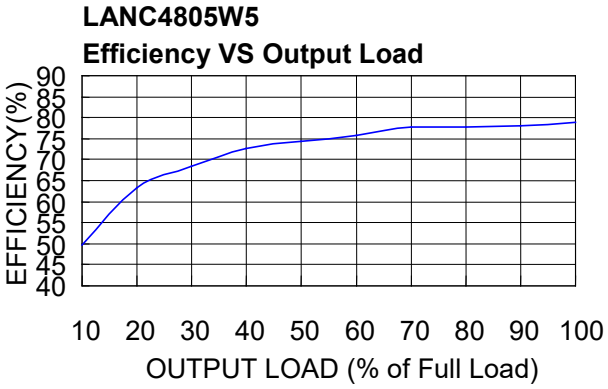

Specification for EMC EN55022 Class A Compliance

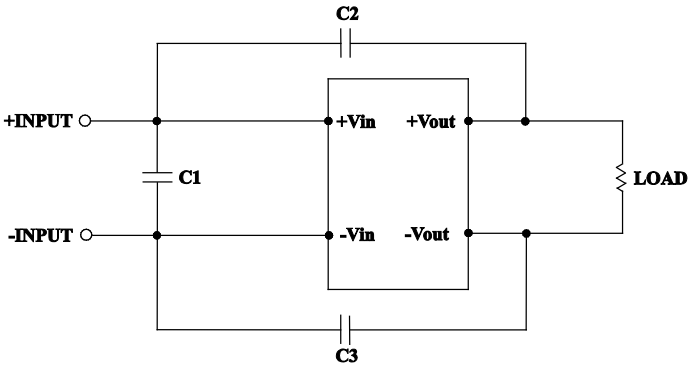

The components used in the figure above are as follows:

	C1	C2	C3
LANC12xxW5	4.7µF/25V 1210 MLCC	1000pF/2KV 1808 MLCC	1000pF/2KV 1808 MLCC
LANC24xxW5	N/A	1000pF/2KV 1808 MLCC	1000pF/2KV 1808 MLCC
LANC48xxW5	N/A	1000pF/2KV 1808 MLCC	1000pF/2KV 1808 MLCC

Specification for EMC EN55022 Class B Compliance

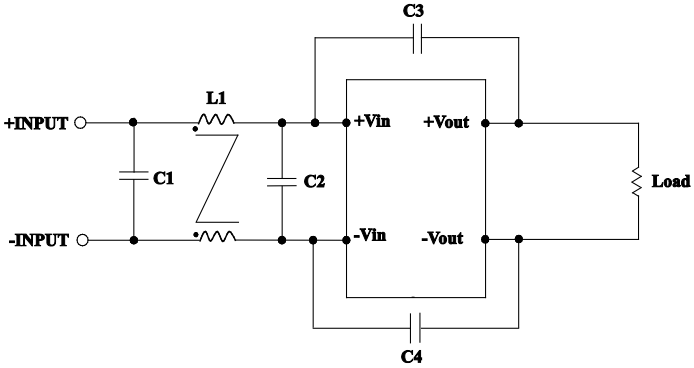

The components used in the figure above are as follows:

	C1	C2	C3&C4	L1
LANC12xxW5	4.7µF/50V 1812 MLCC	N/A	1000pF/2KV 1808 MLCC	PMT-050 (325µH) Common Choke
LANC24xxW5	6.8µF/50V 1812 MLCC	N/A	1000pF/2KV 1808 MLCC	PMT-050 (325µH) Common Choke
LANC48xxW5	2.2µF/100V 1812 MLCC	2.2µF/100V 1812 MLCC	1000pF/2KV 1808 MLCC	PMT-050 (325µH) Common Choke

PMT-050

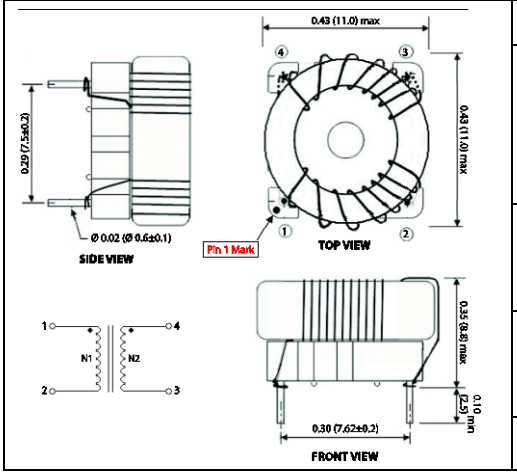

SPECIFICATIONS	
Inductance	Pins 1-2: 325μH±35% Pins 3-4: 325μH±35%
	Test Conditions: 100KHz/100mV
	Measurement Instrument: HP 4263B LCR Meter
Impedance	DCR (Max): 35mΩ
	Measurement Instrument: HIOKI 3540mΩ HITESTER
Rated Current	IDC (Max): 3.3A
	Measurement Instrument: Agilent 34401A Meter
Recommended Through Hole	ψ0.8mm

MECHANICAL DRAWING

Unit: inches (mm)

DIP TYPE

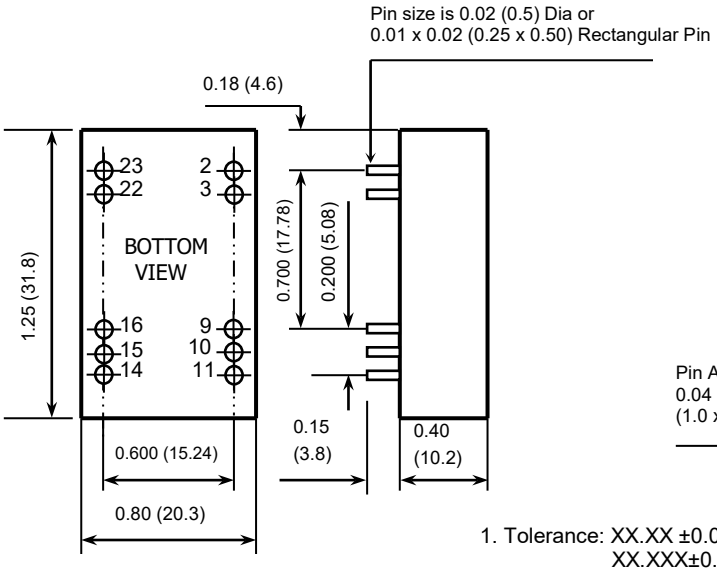

SMT TYPE
(add suffix "S")

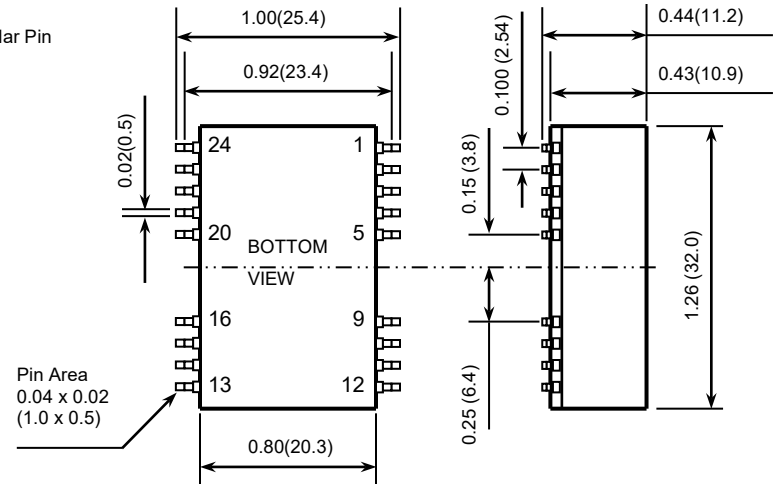

1. Tolerance: XX.XX ±0.02 (X.X±0.5)
   XX.XXX±0.01 (X.XX±0.25)
2. Pin pitch tolerance: ±0.01 (0.25)
3. Pin dimension tolerance: ±0.004 (0.1)

PIN CONNECTION (DIP)

PIN	SINGLE	DUAL	PIN	SINGLE	DUAL
2	-INPUT	-INPUT	23	+INPUT	+INPUT
3	-INPUT	-INPUT	22	+INPUT	+INPUT
9	NC	COMMON	16	-OUTPUT	COMMON
10	NC (Note 9)	NC (Note 9)	15	NC (Note 9)	NC (Note 9)
11	NC	-OUTPUT	14	+OUTPUT	+OUTPUT

PIN CONNECTION (SMT)

PIN	SINGLE	DUAL	PIN	SINGLE	DUAL
2	-INPUT	-INPUT	23	+INPUT	+INPUT
3	-INPUT	-INPUT	22	+INPUT	+INPUT
9	NC	COMMON	16	-OUTPUT	COMMON
10	NC	NC	15	NC	NC
11	NC	-OUTPUT	14	+OUTPUT	+OUTPUT
Others	NC	NC	Others	NC	NC

COMPANY INFORMATION

Wall Industries, Inc. has created custom and modified units for over 50 years. Our in-house research and development engineers will provide a solution that exceeds your performance requirements on-time and on budget. Our ISO9001: 2015 certification is just one example of our commitment to producing a high quality, well-documented product for our customers.

Our past projects demonstrate our commitment to you, our customer. Wall Industries, Inc. has a reputation for working closely with its customers to ensure each solution meets or exceeds form, fit and function requirements. We will continue to provide ongoing support for your project above and beyond the design and production phases. Give us a call today to discuss your future projects.

Contact **Wall Industries** for further information:

Phone: ☎(603)778-2300
Toll Free: ☎(888)597-9255
Fax: ☎(603)778-9797
E-mail: sales@wallindustries.com
Web: www.wallindustries.com
Address: 37 Industrial Drive
Exeter, NH 03833

©2019 Wall Industries, Inc. Specifications subject to change without notice. Wall Industries is not responsible for typographical errors. The information contained herein is for informational purposes only. This information is provided by Wall Industries and we make no representations or warranties of any kind, express or implied, about the completeness, accuracy, reliability, suitability or availability with respect to the information contained in this document for any purpose. All product and manufacturer names are trademarks or registered trademarks of their respective companies.